KEY FEATURES

- LOW $R_{DS(ON)}$ AND Q_G
- AVALANCHE RATED
- TO-254 PACKAGE
- HERMETICALLY SEALED, ISOLATED PACKAGE
- JANTX, JANTXV SCREENING AVAILABLE

APPLICATIONS

- SWITCH-MODE AND RESONANT-MODE POWER SUPPLIES
- DC-DC CONVERTERS
- PFC CIRCUITS
- AC AND DC MOTOR DRIVES
- ROBOTICS AND SERVO CONTROLS

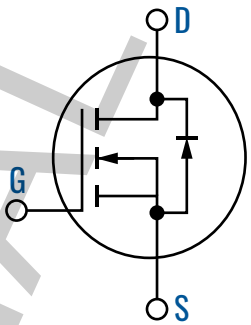

ORDERING GUIDE

Part Number SMF473

Description 400V N-Channel Power MOSFET

ABSOLUTE MAXIMUM RATINGS (T_A = 25°C unless otherwise stated)

PARAMETER	SYMBOL	VALUE	CONDITIONS
Continuous Drain Current	I_D	23A 14A	V_{GS} = 10V, T_C = 25°C V_{GS} = 10V, T_C = 100°C
Pulsed Drain Current (see note 1)	I_{DM}	92A	
Max. Power Dissipation	P_D	250W	T_C = 25°C
Linear Derating Factor		2W/°C	
Gate-to-Source Voltage	V_{GS}	±20V	
Single Pulse Avalanche Energy (see note 2)	E_{AS}	980mJ	
Avalanche Current (see note 1)	I_{AR}	23A	
Repetitive Avalanche Energy (see note 1)	E_{AR}	25mJ	
Peak Diode Recovery dv/dt (see note 3)	dv/dt	4V/ns	
Operating Junction Temperature	T_J	-55°C to 150°C	
Storage Temperature Range	T_{STG}	-55°C to 150°C	
Lead Temperature		300°C	0.063in. (1.6mm) from case for 10s
Weight (typical)		9.3g	

1. Repetitive Rating; Pulse width limited by maximum junction temperature.
2. V_{DD} = 50V, starting T_J = 25°C, L= 3.7mH Peak I_L = 23A, V_{GS} = 10V.
3. I_{SD} ≤ 23A, di/dt ≤ 170A/µs, V_{DD} ≤ 400V, T_J ≤ 150°C.

PROVISIONAL

ELECTRICAL SPECIFICATIONS

T_J = 25°C unless otherwise noted

Parameter	Conditions	Symbol	Min.	Typ.	Max.	Unit
Drain-to-Source Breakdown Voltage	V_{GS} = 0V, I_D = 1.0mA	BV_{DSS}	400			V
Temperature Coefficient of Breakdown Voltage	Reference to 25°C, I_D = 1.0mA	$\Delta BV_{DSS}/\Delta T_J$		0.46		V/°C
Static Drain-to-Source On-State Resistance	V_{GS} = 10V, I_D = 14A (see note 4) V_{GS} = 10V, I_D = 23A	$R_{DS(on)}$			0.20 0.23	Ω
Gate Threshold Voltage	V_{DS} = V_{GS}, I_D = 250µA	$V_{GS(th)}$	2.0		4.0	V
Forward Transconductance	V_{DS} = 15V, I_{DS} = 14A (see note 4)	g_{fs}	1.4			S(℧)
Zero Gate Voltage Drain Current	V_{DS} > 320V, V_{GS} = 0V V_{DS} = 320V, V_{GS} = 0V, T_J = 125°C	I_{DSSnO}			25 250	µA
Gate-to-Source Leakage Forward	V_{GS} = 20V	I_{GSS}			100	nA
Gate-to-Source Leakage Reverse	V_{GS} = -20V	I_{GSS}			-100	nA
Total Gate Charge	V_{GS} = 10V, I_D = 23V, V_{DS} = 200V	Q_g			210	nC
Gate-to-Source Charge		Q_{gs}			28	nC
Gate-to-Drain ('Miller') Charge		Q_{gd}			120	nC
Turn-On Delay Time	V_{DD} = 200V, I_D = 23V, V_{GS} = 10V, R_G = 2.35Ω	$t_{d(on)}$			33	ns
Rise Time		t_r			140	ns
Turn-Off Delay Time		$t_{d(off)}$			120	ns
Fall Time		t_f			99	ns
Total Inductance	Measured from Drain lead to Source lead 0.25in. (6mm) from the package	L_S+L_D		6.8		nH
Input Capacitance	V_{GS} = 0V, V_{DS} = 25V, f = 1.0MHz	C_{iss}		4200		pF
Output Capacitance		C_{oss}		900		pF
Reverse Transfer Capacitance		C_{rss}		400		pF

4. Pulse width ≤ 300 µs; Duty Cycle ≤ 2%

SOURCE-DRAIN DIODE ELECTRICAL SPECIFICATIONS

T_J = 25°C unless otherwise noted

Parameter	Conditions	Symbol	Min.	Typ.	Max.	Unit
Continuous Source Current	V_{GS} = 0V	I_S			23	A
Pulse Source Current (see note 1)	Repetitive, pulse Width Limited by T_{JM}	I_{SM}			92	A
Diode Forward Voltage (see note 4)	T_j = 25°C, I_S = 23A, V_{GS} = 0V	V_{SD}			1.8	V
Reverse Recovery Time (see note 4)	T_j = 25°C, I_F = 23A, di/dt ≤ 100A/µs, V_{DD} ≤ 50V	t_{rr}			1000	ns
Reverse Recovery Charge		Q_{RR}			16	µC
Forward Turn-On Time		Intrinsic turn-on time is negligible. Turn-on speed is substantially controlled by LS + LD.				

1. Repetitive Rating: Pulse width limited by maximum junction temperature.

4. Pulse width ≤ 300 µs; Duty Cycle ≤ 2%

PROVISIONAL

THERMAL RESISTANCE

Parameter	Conditions	Symbol	Min.	Typ.	Max.	Unit
Junction-to-Case		R_{THJC}			0.5	°C/W
Case-to-sink		R_{THCS}		0.21		°C/W
Junction-to-Ambient	Typical socket mount	R_{THJA}			48	°C/W

OUTLINE DIMENSION

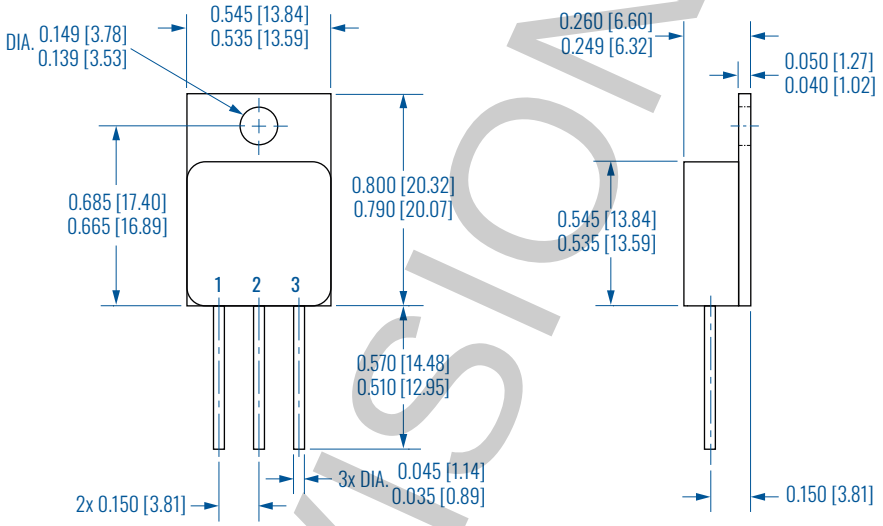

All dimensions in inches (mm) minimum maximum

PIN DESIGNATIONS

1 = DRAIN
2 = SOURCE
3 = GATE

SCHEMATIC

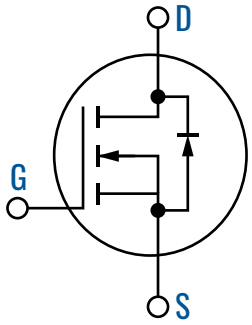

PROVISIONAL

© 2019 Solitron Devices, Inc.
This document is believed to be correct at the time of publication and Solitron Devices accepts no responsibility for consequences from printing errors or inaccuracies. All specifications are subject to change without notice.

Solitron Devices, Inc. • 3301 Electronics Way, West Palm Beach, Florida 33407, USA • +1 561-848-4311 • sales@solitrondevices.com